INTRODUCTION TO MATLAB SIMULINK

EXPERIMENT NUMBER 09

OBJECTIVES:

- Introduce MATLAB Simulink for control system simulations.
- Observe and record outputs for different simulations.

APPARATUS:

A PC or Laptop with MATLAB Simulink installed.

THEORY AND DIAGRAMS:

Simulink is a graphical programming environment in MATLAB that extends the capabilities of MATLAB for modelling, simulating, and analysing multi-domain dynamical systems. It is widely used in various engineering disciplines for its intuitive and visual approach to system design.

- Simulink is an extension to MATLAB.
- In Simulink, users construct block diagram models for dynamic systems, departing from traditional text-based coding.
- Simulink excels in modelling complex nonlinear systems with ease.
- It has the capability to model both continuous and discrete-time components, enhancing versatility in system representation and analysis.

PROCEDURE:

Part 01

1. Start MATLAB and start Simulink by clicking on the “Start Simulink” button, as shown in Figure 1. Or you can start Simulink by running the command “simulink” in the command window.
2. In the simulation start window, click “Blank Model”, which it will create a black Simulink model.
3. Save your Simulink project as “part_01_A.slx” in a folder created with the name “EC_20XX_XXX”. Also, create a Word file and rename it with your student number. Save it in the same folder.
4. Click the “Library Browser” button to open the Simulink Library Browser. This contains all the Simulink components that you can use for your models. Then, in the left panel, select “Sources” to open up the Simulink Source Models and select “Sine Wave”. Drag and drop the model to the canvas, as shown in Figure 2. For the amplitude, insert “1”. The default value for the amplitude is 1. You can double-click the model and change this anytime you want.

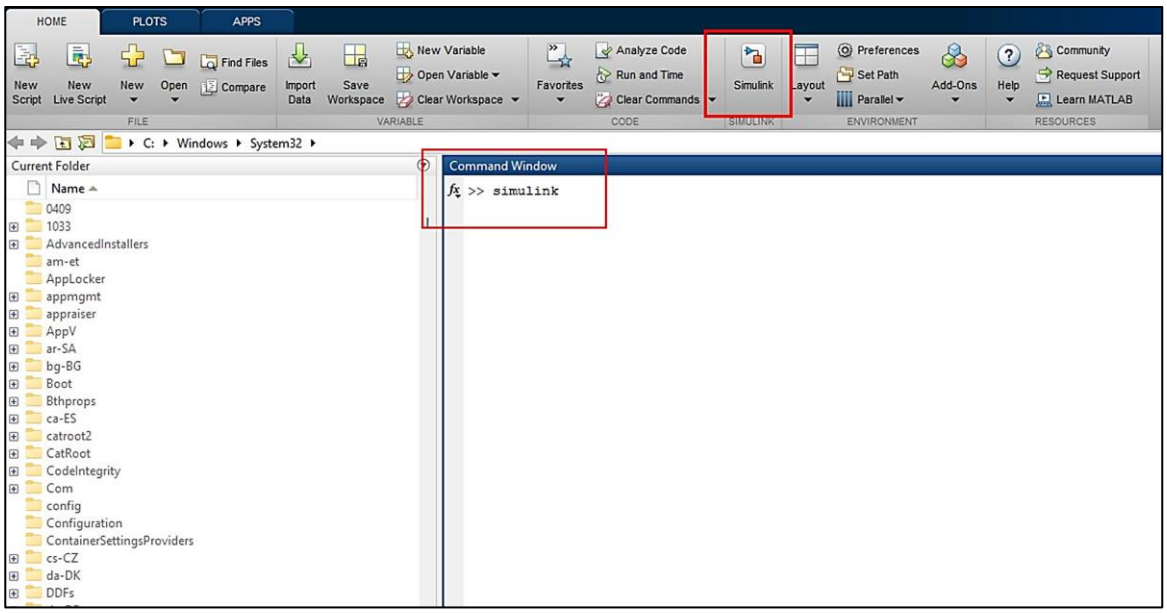

Figure 1

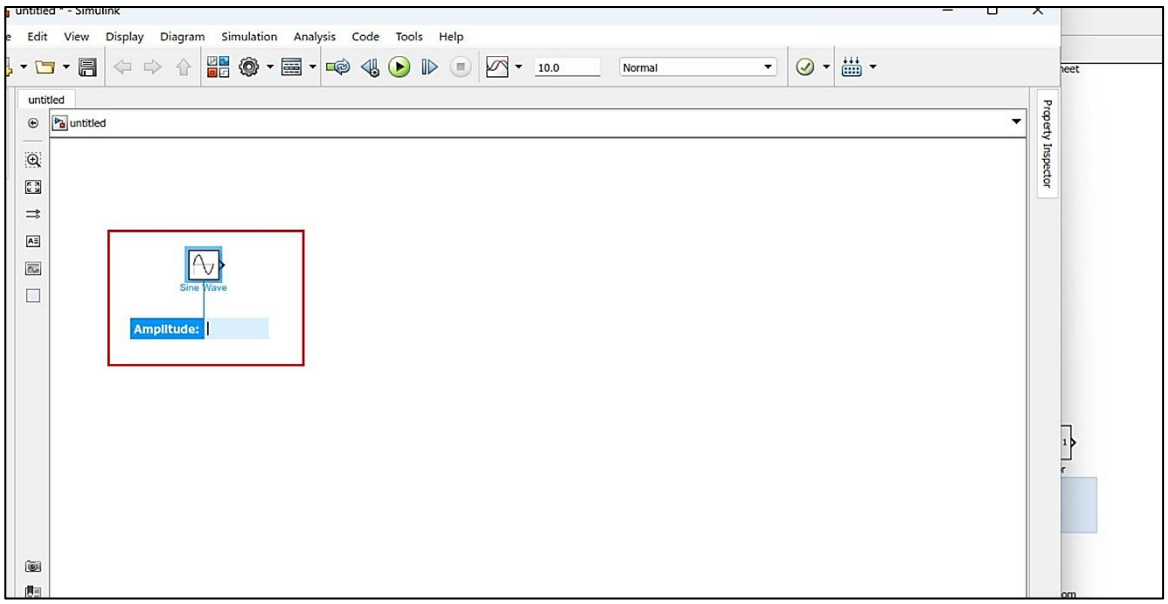

Figure 2

5. You can add components by double-clicking on the canvas also. Double-click the canvas and input “scope” to add an output visualizer to view the signal generated by the source. Enter “number of ports” as 1 and we can change it later from the menu.
6. Connect the source and scope by clicking on the terminal ends.
7. Run the simulation by keeping everything default by clicking the “play” button in the top options bar, as shown in Figure 3. Then, double-click the scope to view the output waveform.
8. Click the cursor measurement and, using the horizontal cursors, note down the value of peak-to-peak amplitude and using the vertical cursors, note down the periodic time of the waveform, as shown in Figure 4.

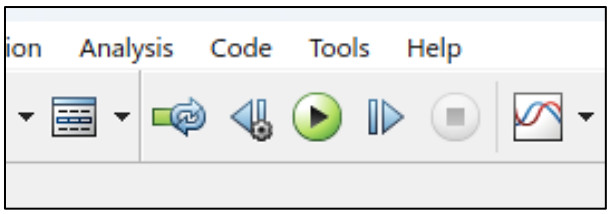

Figure 3

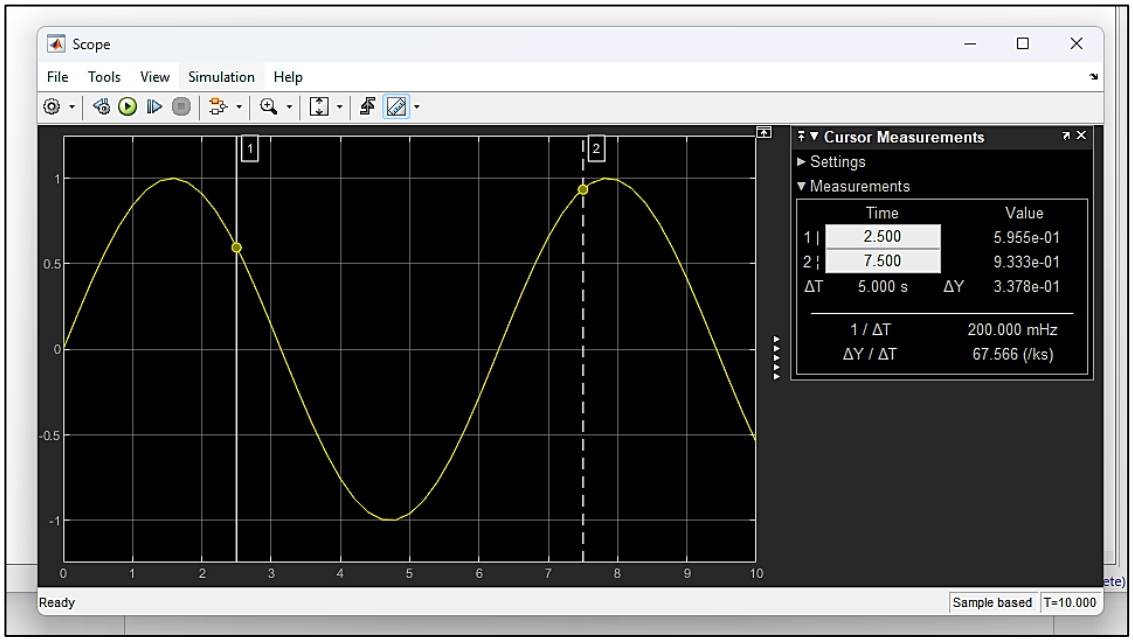

Figure 4

9. Get a screenshot of the circuit diagram and waveform and insert them into the created Word fine under Part 01-A. Update the Word with the amplitude and frequency of the waveform that you have measured.
10. Insert a “gain” block between source and scope. change the gain as “3”.
11. Change the “number of ports” of the scope by double clicking the scope and file >> number of input ports >> 2. Use the second input of the scope to observe the input waveform by directly connecting it to the source, as shown in Figure 5.

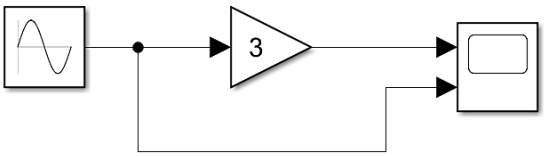

Figure 5

12. Run the simulation and observe the output waveform. Use cursor measurements to measure the parameters of both waveforms as you did in step (8).
13. Record your results on the Word file under Part 01-B as you did in step (9).

Part 02

1. Create a new project in Simulink File >> New >> Black Model and design the circuit shown in Figure 6. You may follow the instructions below.

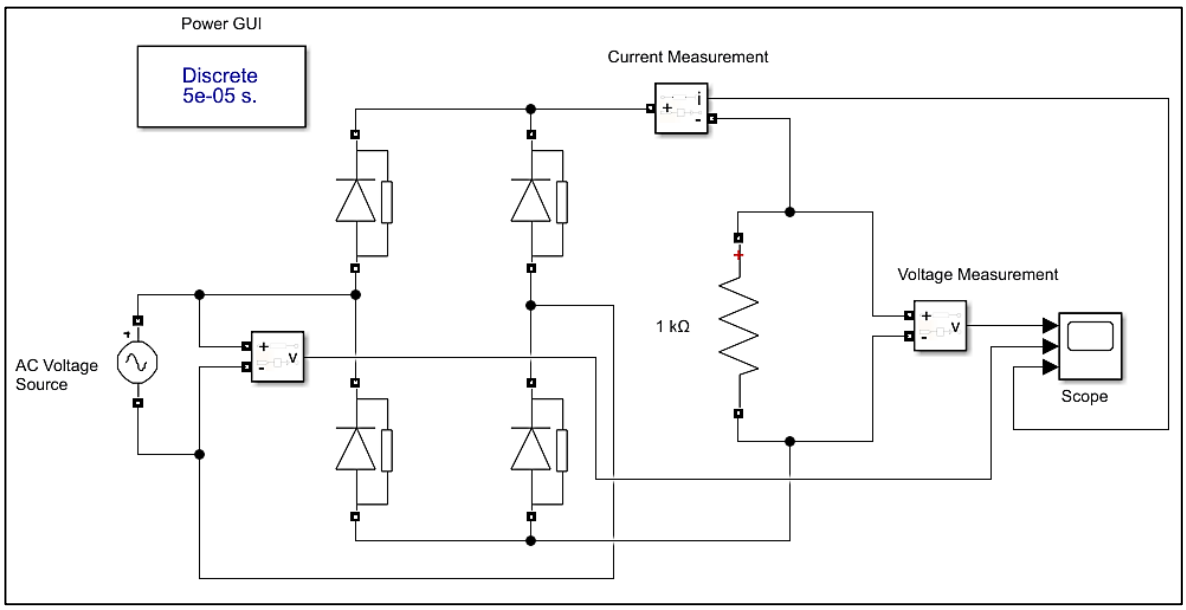

Figure 6

a. Use Simscape >> Specialised power systems >> fundamental blocks from the left side panel to insert the blocks for the above circuit. “AC Voltage source” in Electrical sources works as the power source to the system. Set VRMS value to 230V. Insert the diodes from “Power Electronics” and remove the tick “Show measurement port” to remove the additional ports if needed. Add current and voltage sources from “Measurements” and insert a scope to observe the 3 outputs.
b. Follow the same procedure and construct the circuit as shown in Figure 6.
c. Insert “Powergui” and set Simulation type to “Discrete”.
d. Run the simulation with 0.05 s simulation stop time and observe the 3 outputs. Repeat the above step 13 and save the content under Part 02-A.
e. Now, insert a capacitor with 0.01 µF parallel with the load resistor and observe the change in waveforms. Repeat the step (d) and save content under Part 02-B.
f. Change the capacitance to 0.1 µF and observe the change in waveforms. Repeat the step (d) and save content under Part 02-C.

DISCUSSION:

1. Explain the concept of block diagram modelling in Simulink. How does it help in system design and analysis?
2. In what engineering disciplines is Simulink commonly used, and what advantages does it offer in those applications?